Lasertack New Laser Generation

MLL-H-1319/600~1500mW

LOW NOISE INFRAFED LASER AT 1319 nm

All solid state low noise infrared laser at 1319 nm is made features of ultra compact, long lifetime, low cost and easy operating, which is used in scientific experiment, optical instrument, optical sensor, measurement, communication, spectrum analysis, etc.

SPECIFICATIONS

Wavelength (nm)	1319±1		
Output power (mW)	>600, 700, 800, … ,1500		
Laser crystal	Nd:YAG		
Transverse mode	Near TEM_{00}		
Operating mode	CW		
Power stability (rms, over 4 hours)	<1%, <3%, <5%		
Noise of amplitude (rms, 20Hz~20MHz)	<1%		
Warm-up time (minutes)	<10		
M^2 factor	<2. 0		
Beam divergence, full angle (mrad)	<2. 0		
Beam diameter at the aperture (mm)	~3. 0		
Beam height from base plate (mm)	29		
Pointing stability after warm-up (mrad)	<0.05		
Operating temperature (℃)	10~35		
Power supply (90-264VAC)	PSU-H-LED	PSU-H-FDA	PSU-H-OEM
Expected lifetime (hours)	10000		
Warranty period	1 year		
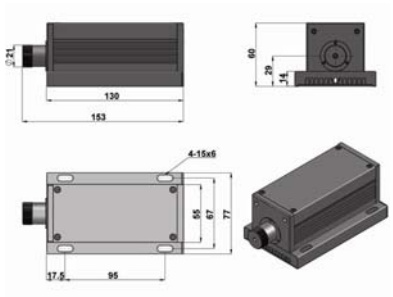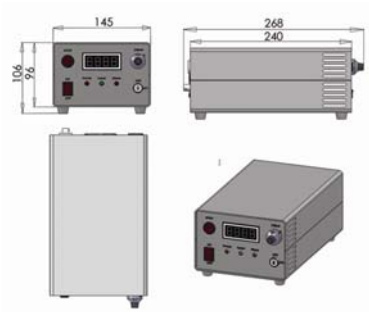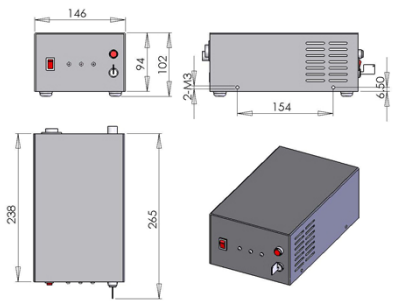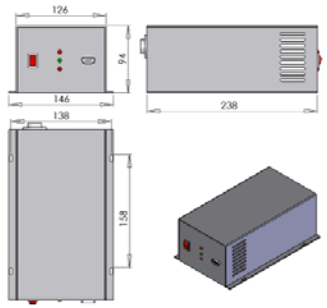
MxL-H-1319	PSU-H-LED	PSU-H-FDA	PSU-H-OEM
153(L)×77(W) ×60(H) mm^3, 0.9 kg	268(L) ×145(W) ×106 (H) mm^3, 2.6 kg	238 (L) ×146(W) ×102 (H) mm^3, 2.3 kg	238 (L) ×146(W) ×94 (H) mm^3, 2.2 kg